MODEL:S0351M01-1

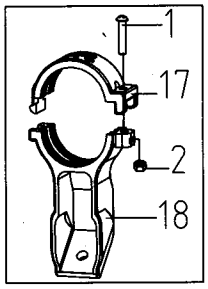

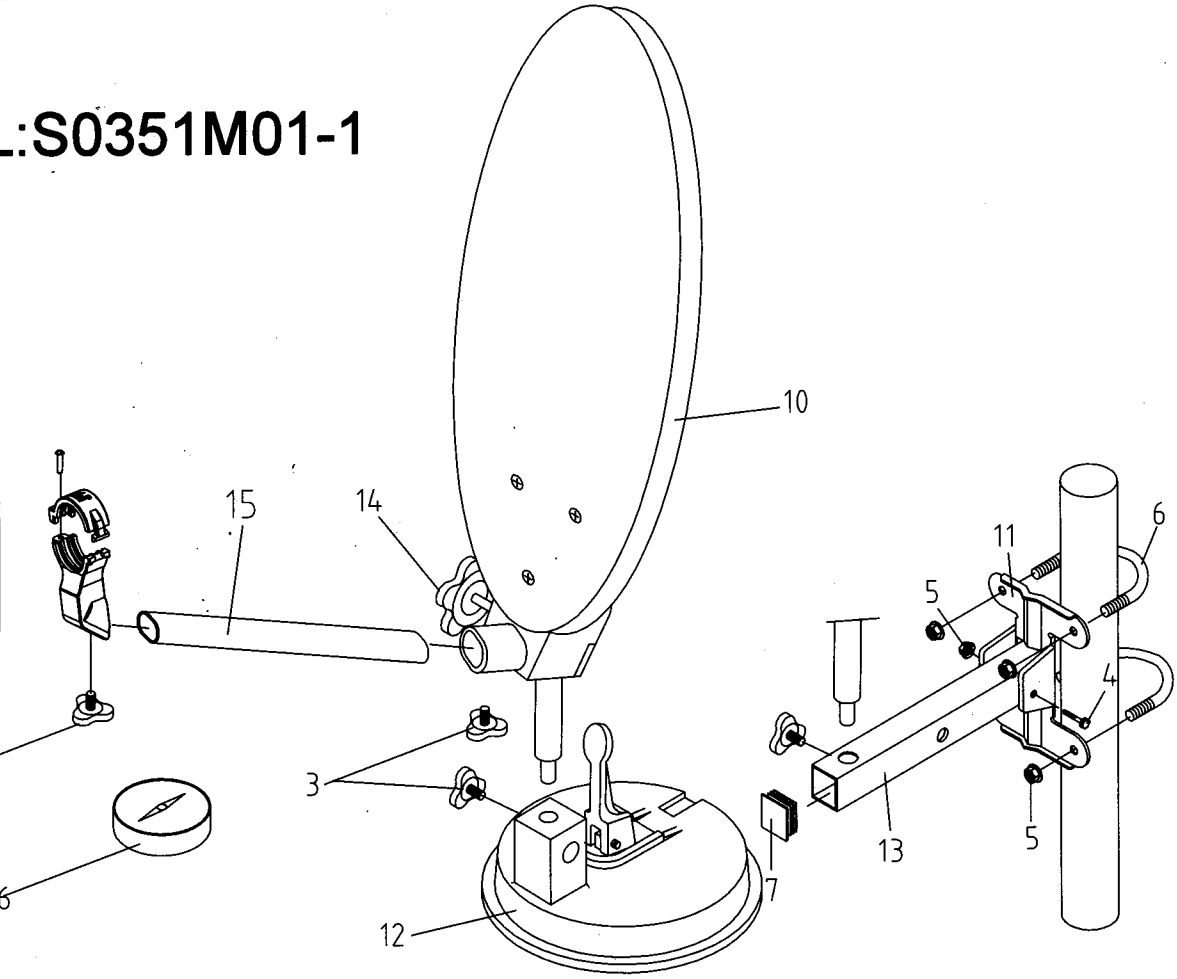

WARNING

1.When using sucking base (part No.12),please make sure its location's smooth and flat. Press all the air out of sucking base as possible as you can so that it can be set up successfully.

2.Avoid the dishes' drop off & to prevent from any damage or hurt to people, if the dish will be used for long ,pls don't apply sucking base.

警告:

1.使用吸盤時,先確認吸附的平面為平整光滑面,並盡量使吸盤內空氣壓出, 才能有效吸附 .

2.此天線欲長期使用時請勿使用吸盤固定 以免脫落傷及他人或造成天線損壞 .

NO.	ITEM	DESCRIPTION	Q'TY
18		40mm LNBF Clamp Holder	1
17		40mm LNBF Clamp	1
16		COMPASS	1
15		LNBF Arm	1
14		M8 knob bolt	1
13		Extention rod	1
12		Base	1
11		Bracket for wall & pole	1
10		Reflector w/Bracket	1
7		Plug	1
6		M6*W38 U Bolt	2
5		M6 Flange nut	5
4		M6*35 Hex-head cap screw W/W	1
3		M6 knob bolt	3
2		M4 hex nut	1
1		M4*20 Round-head cross screw	1

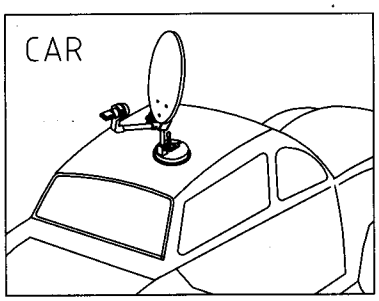

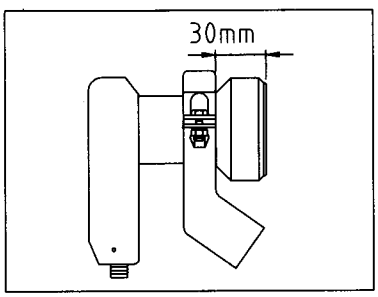

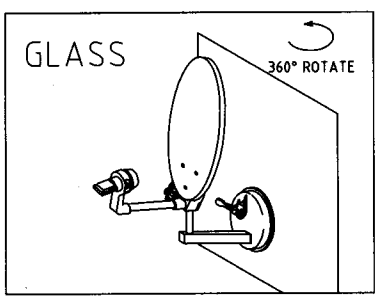

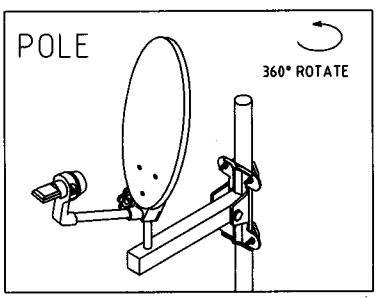

Thread	Max Tightening torques	
M6	8.8N.m	90Kgf.cm
remark: 1N.m=10.197Kgf.cm		